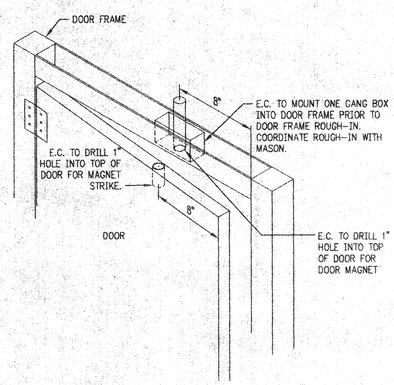

ALARM DOOR SWITCH

SCALE: NONE

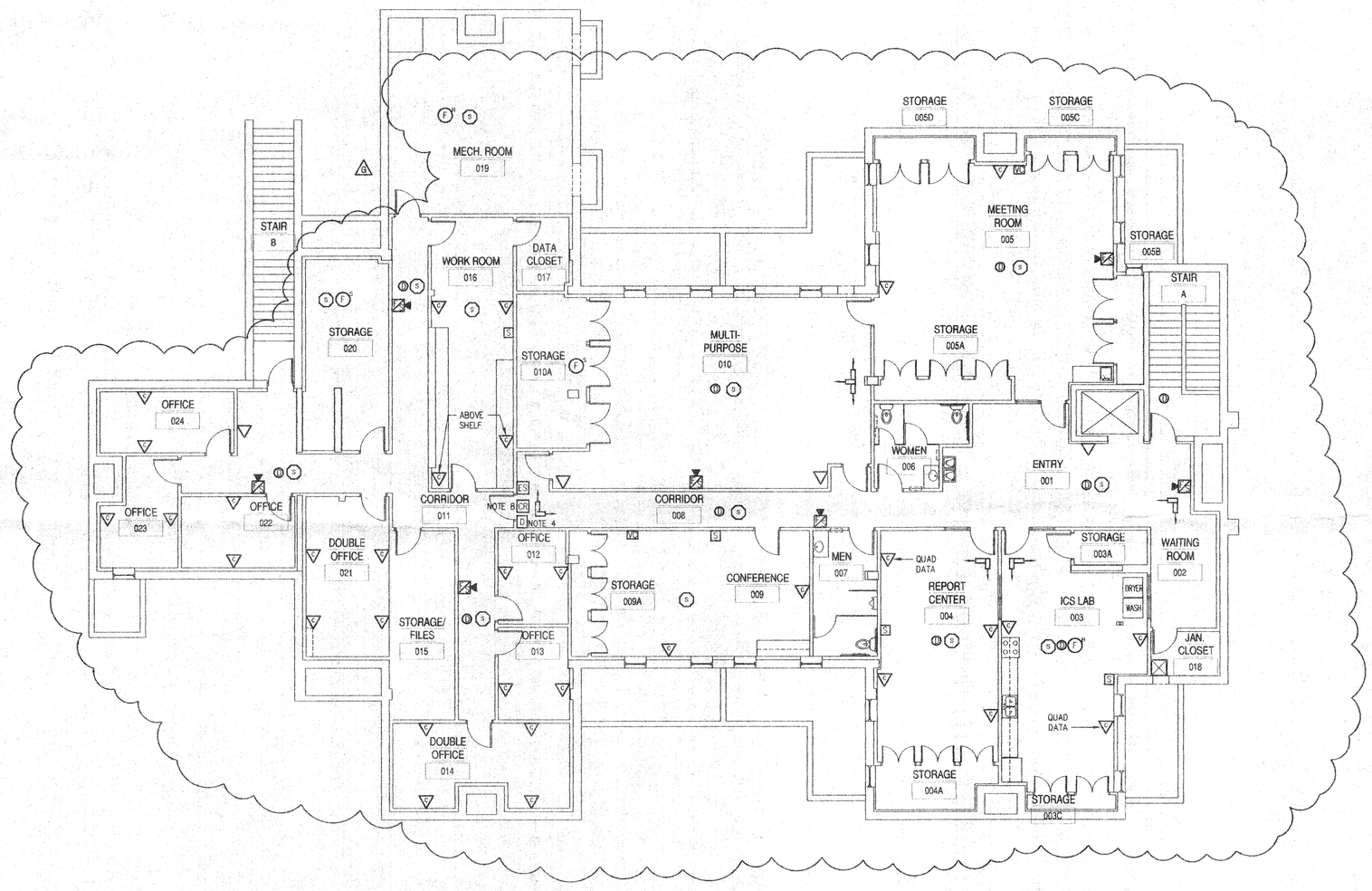

COMMUNICATIONS PLAN

SCALE: 1/8" = 1'-0"

G

F^S FIRE DETECTOR (SMOKE)

F^H FIRE DETECTOR (HEAT)

NOTES

1. CONTRACTOR TO PROVIDE BOXES AND 3/4" CONDUIT FROM BOX TO ABOVE CEILING FOR (4) EMERGENCY PHONES AND 1" CONDUIT FOR ALL TELEPHONE/DATA OUTLETS. ALL CONDUIT TO HAVE PLASTIC BUSHING ON BOTH ENDS.
2. CONTACT TIM TANGLIN FOR DETAILS.
3. EXTEND FIRE AND SECURITY ALARM SYSTEM INTO REMODELED SPACE. CONTACT LEGACY COMMUNICATIONS (RUSSELL DeGROOT) FOR DETAILS.
4. SEE DETAIL "ALARM DOOR SWITCH" FOR INSTALLATION REQUIREMENTS. DOOR SWITCH TO PROVIDE INDICATION TO ALARM MONITOR ON FIRST FLOOR THAT DOOR IS OPEN.
5. ADD ONE NEW MONITOR AND ASSOCIATED EQUIPMENT IN EXISTING MONITOR AREA (ROOM 139) ON FIRST FLOOR. TO BE DEDICATED TO THE CAMERAS BEING ADDED ON THIS PROJECT. NEW MONITOR TO MATCH EXISTING EQUIPMENT.
6. CONTRACTOR TO SUPPLY BOX AND CONDUIT FOR COMMUNICATION/DATA OUTLETS TO ABOVE CEILING.
7. EXTEND FIRE AND SECURITY ALARM SYSTEM INTO REMODELED SPACE. CONTACT LEGACY COMMUNICATIONS FOR DETAILS. FIRE ALARM PANEL IS NOTIFIER AFP-200.
8. G CONTRACTOR TO INSTALL PULL STATION AT FIRE RISER.

RAASCH ASSOCIATES, INC.
ENGINEERS ARCHITECTS

400 AMS COURT
GREEN BAY, WISCONSIN 54313

PHONE: 920-434-2128
FAX: 920-434-2112
E-MAIL: engineer@raaschassoc.com

SERVING INDUSTRY & COMMERCE IN THE UNITED STATES

PROFESSIONAL SEAL(S)

OUTAGAMIE COUNTY YOUTH AND FAMILY SERVICES

LOWER LEVEL REMODEL

APPLETON, WISCONSIN

MARK	DATE	DESCRIPTION
G	04/25/03	ISSUED FOR FIELD MEMO NO. 9
F	04/14/03	REVISED FOR FIELD MEMO NO. 7
E	04/02/03	REVISED FOR FIELD MEMO NO. 4
D	02/28/03	REVISED FOR ADDENDUM 1594 CC-02
C	02/24/03	ISSUED FOR ADDENDUM 1594 CC-01
B	02/14/03	ISSUED FOR BIDS
A	01/31/03	ISSUED FOR OWNER REVIEW

PROJECT NO: 1594

CAD FILE: 1594-E103

DRAWN BY: T. ABEL

DESIGNED BY: C. DeWAAL

Copyright © 2003, Raasch Associates, Inc.

SHEET TITLE:

COMMUNICATIONS PLAN

SHEET:

E103